Milesight

NDAA

IP67

IK10

AI TrueColor Dual-sensor 180° Panoramic Network Camera

DATASHEET

AI | 180° | Fusion Xpert | 8MP | Fixed Dual-Lens | True Color | Super WDR | Object Counting | Heat Map | PoE | GMST Onvif

- NDAA Compliance (The fully NDAA-compliant products are well suited for government, defense and a range of projects subject to the NDAA.)
- 180° Ultra-Wide FOV & Zero Distortion (With an expanded 180° panoramic view and a 58° vertical field of view, it delivers an immersive and comprehensive perspective.)
- 24/7 TrueColor Imaging (Featuring 4*30m IR and 2*25m White Light, delivering outstanding TrueColor image even in challenging conditions.)
- Smart Hybrid Light (IR remains at night until a target enters the detection area, triggering white light activation, the camera then captures video and critical event details.)
- White Strobe Light Deterrence (Upon detecting suspicious activity, the white strobe light is instantly activated, providing an immediate visual deterrent.)
- Various AI VCA features ensure the physical security, while Object Counting and Heat Map provide trend analysis.
- 1TB Expandable Storage & Built-in Microphone (Supporting ultra-large external micro SD/SDHC/SDXC card storage up to 1TB & featuring an advanced microphone.)

180° Ultra Panoramic View

Introducing dynamic stitching and dual sensors for a seamless 180° panoramic view with 58° vertical coverage, delivering edge-to-edge clarity with zero distortion. This innovation significantly reduces blind spots and enhances detail capture across a wider area, marking a breakthrough in panoramic surveillance.

Precise Strobe Deterrence

Experience next-level security with powerful Active Deterrence. Upon detecting human or vehicle movement in the specific area, the camera instantly switches to TrueColor mode, capturing high-resolution video while the White Flashing Light strobes to deter intruders. Combined with advanced VCA analytics, it ensures unmatched protection and proactive threat prevention.

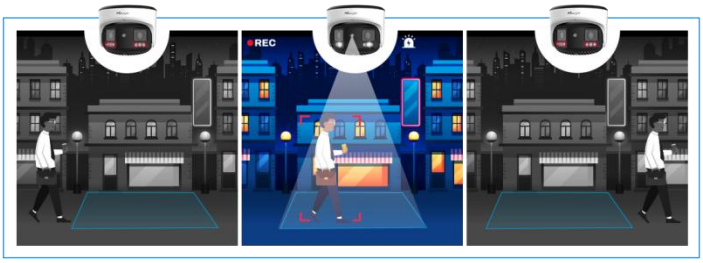

Night Vision with TrueColor Technology

Featuring 30m IR, 25m White Light, dual 4mm F1.0 large-aperture lenses, and a 1/1.8" Starvis Starlight Sensor, this camera delivers ultra-high 2×4MP resolution, ensuring sharp, clear images with true-to-life colors even in complete darkness, providing a superior TrueColor imaging experience.

Edge-Cutting Industrial Design

Milesight's innovative industrial design, including Alarm In/Out, Microphone, Hybrid Light, and 1TB SD Card Slots ensures seamless adaptability for various surveillance needs. With IP67, IK10 ratings, and the TMP 2.0 chip reinforces hardware security, providing enhanced protection against potential threats.

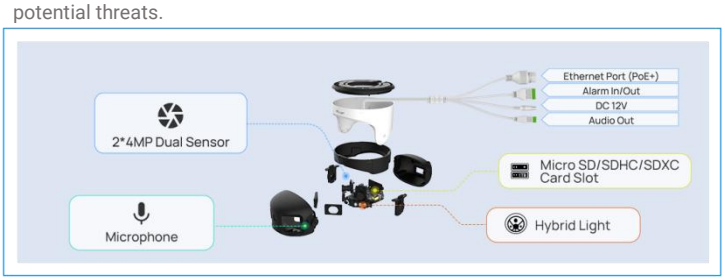

Milesight AI TrueColor Dual-sensor 180° Panoramic Network Camera

	Model	MS-C8477-HPG1
Camera	Image Sensor	Dual 1/1.8” Progressive Scan CMOS
	Min. Illumination	Color: 0.0005Lux@(F1.0, AGC ON), B/W: 0Lux with IR on
	WDR	140dB Super WDR
	Lens	4mm@F1.0
	Mount	M16
	Field of View	H180°/V58°
	Shutter Time	1/100000s~1s
	DORI Distance	Detect: 62.7m Observe: 24.7m Recognize: 12.3m Identify: 6.2m
	Light Type	4 x IR Lights, 2 x White Lights
	Light Distance	Up to 30m (IR Light), Up to 25m (White Light)
	IR Wave Length	850nm
	Day/Night Mode	Day/Night/Auto/Customize
	S/N	>55dB
Video	Max. Image Resolution	5120x1520
	Primary Stream	60Hz: 30fps@(5120x1520), 50Hz: 25fps@(5120x1520)
	Secondary Stream	60Hz: 30fps@(1280x380, 960x288, 736x224, 640×190) 50Hz: 25fps@(1280x380, 960x288, 736x224, 640×190)
	Tertiary Stream	60Hz: 30fps@(1920x576), 50Hz: 25fps@(1920x576)
	ePTZ Stream	60Hz: 30fps@(1920x1080), 50Hz: 25fps@(1920x1080)
	Video Compression	H.265+/H.265(HEVC)/H.264+/H.264/MJPEG
	Video Bit Rate	16Kbps~16Mbps(CBR/VBR Adjustable)
Image	Privacy Masking	Up to 8 Mask Areas
	ROI	Up to 8 Areas
	Image Setting	Brightness/Contrast/Saturation/Sharpness
	Image Enhancement	BLC, HLC, 2D DNR, 3D DNR, Defog, AWB, AGC, Anti-flicker, Image Rotation, Deblur, etc.
Interface	Ethernet	1*RJ45 10M/ 100M Ethernet Port
	Built-in Microphone	Support
	Audio Interface	1*Audio Out Interface (Standard)
	Alarm I/O	1/1 (Standard)
Network	Network Storage	NAS(Support NFS, SMB/CIFS), ANR
	Protocol	IPv4/IPv6, ARP, TCP, UDP, RTCP, RTP, RTSP, RTMP, HTTP, HTTPS, DNS, DDNS, DHCP, FTP, NTP, SMTP, SNMP, UPnP, Bonjour, VPN, SIP, LLDP, PPPoE, VLAN, 802.1x, QoS, IGMP, ICMP, SSL,TLS 1.2

Audio	Audio Compression	G.711/AAC/G.722/G.726
	Audio Sampling Rate	8/16/32/44.1/48KHz
	Audio Bit Rate	16~256kbps
Intelligent Analytics	Video Analysis	**VCA 2.0:** Intrusion Detection, Region Entrance, Region Exiting, Advanced Motion Detection, Line Crossing, Loitering, Object Left, Object Removed
	Object Counting & Report	Count the number of objects crossing the line, optionally human and vehicle, and support regional people counting for up to 4 detection areas
	Heat Map	The built-in statistical behavior analysis enables you to identify the busiest areas within the environment
	Attribute Extraction	Simultaneously detect up to 50 targets and capture humans and vehicles in real time. Recognize attributes including Upper and Lower Clothing Color, Hat, and Vehicle Types (Bicycle, Car, Motorcycle, Bus, Truck, E-scooter) and Vehicle Colors (Car, Bus, Truck).
	Face Detection & Face Attribute Recognition	Detect and capture faces, get real-time snapshots. The attributes include Age, Gender, Glasses, Mask and Cap.
	Hard Hat Detection	Detect whether individuals are wearing safety hats. Trigger an alarm when a person is identified without a hard hat.
	Sound Classification	Detect gunshot, glass-break, and screaming.
	Privacy Protection	Automatically detect faces or human bodies in the video stream and overlay mosaic effects. Supported on Primary Stream / Secondary Stream, Compatible with H.265/H.264 formats.
	Fall Detection	Detect a person's fall and trigger an alarm to alert others for timely assistance.
	Violence Detection	Identify violent behavior and trigger an alarm to alert others to intervene or prevent the action.
Event	One-Click Disarm	Support
	Basic Event	Motion Detection, Tamper Detection, Audio Alarm, External Input, External Output, etc.
	Exception	Network Disconnection, IP Address Filtering, Record Failed, SD Card Full, SD Card Uninitialized, SD Card Error, No SD Card,etc.
	Event Action	FTP Upload Record, SMTP Upload Record, SD Card Record, Snapshot, SIP Phone, Play Audio, External Output, HTTP Notification, etc.
System	Watermark	Support
	Storage	Support Micro SD/SDHC/SDXC Card Local Storage, up to 1TB
	SIP/VoIP Support	Yes, Voice & Video-over-IP
	System Compatibility	ONVIF Profile G & M & S & T, API
General	Working Temperature	-40℃~60℃
	Working Humidity	0~95%(Non-condensing)
	Power Supply	PoE+(802.3at) / DC 12V / 2A±20%
	Power Consumption	**Min.:** 4.2W(DC 12V), 5W(PoE+) **Max.**: 12.7W(DC 12V), 15W(PoE+)
	Weight	Approx. 1.5Kg

	Dimensions	Φ160mmX128mm
	Warranty	3 Years / 5 Years (Optional)
Certifications	EMC	CE-EMC (EN 55032, EN 55035, EN61000), FCC (PART 15B)
	Safety	CE-LVD (EN IEC 62368-1)
	Environment	CE-ROHS (Directive (EU) 2015/863 amending 2011/65/EU)
	Protection	IP67, IK10

Milesight AI TrueColor Dual-sensor 180° Panoramic Network Camera

Structure Diagrams

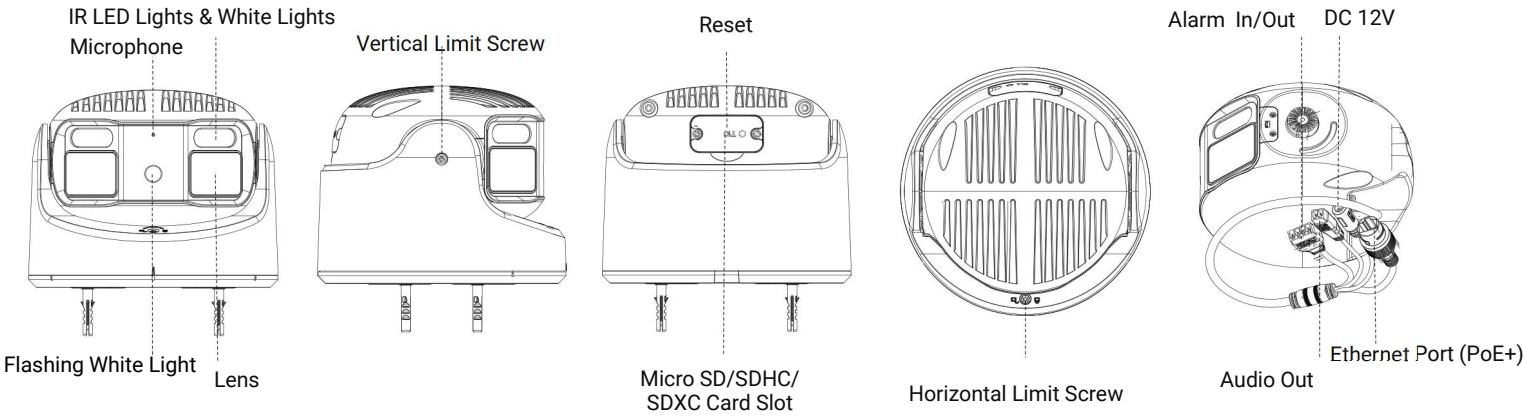

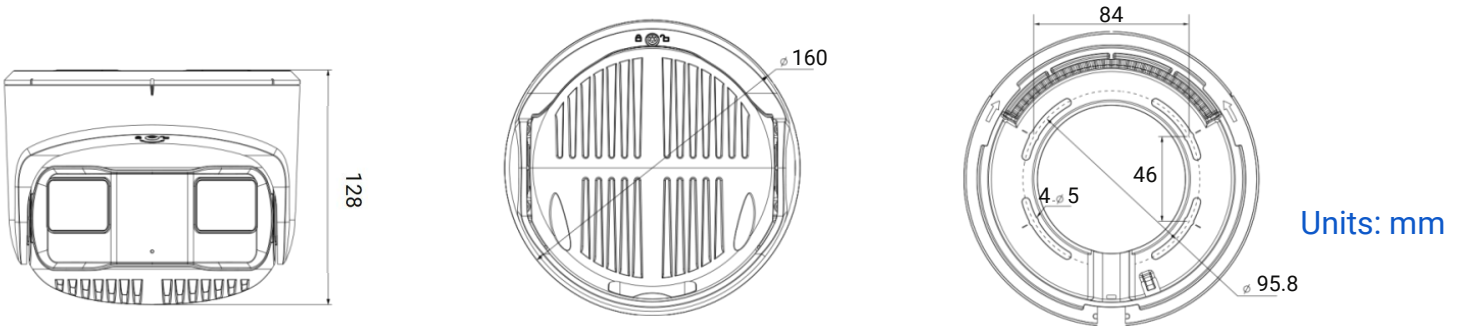

Accessories Map

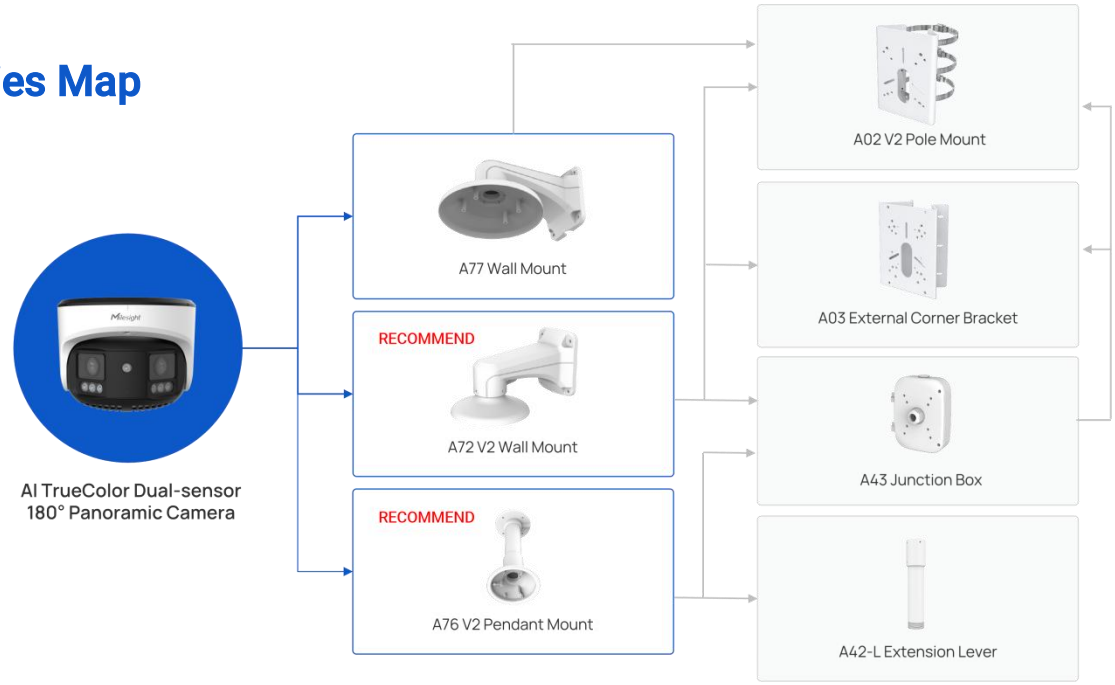

Milesight | www.milesight.com/security
Contact Us: sales@milesight.com support@milesight.com
Add: Building C09, Software Park Phase III, Xiamen 361024, Fujian, China
Tel: +86-592-5922772