Milesight

AI 360° Panoramic Fisheye Network Camera

NDAA

IP67

AF Lens

DATASHEET

KEY FEATURES

- NDAA Compliance (The fully NDAA-compliant products are well suited for government, defense and a range of projects subject to the NDAA.)
- 8/12MP Ultra High Resolution (Capturing images of the entire area with superb clarity and finest details.)
- On-board/Client-side Dewarping (Two ways of dewarping to bring users great flexibility during operation.)
- Multi-interface (Easy installation with built-in Microphone, Audio I/O, Alarm I/O and DC12V.)
- Smart IR II Technology (Combining the High Beam and Low Beam to adjust IR intensity to fit different lighting conditions.)
- 120dB Super WDR (Excellent performance even when the ratio of the luminosity of brightest and darkest is up to 120dB.)
- 256G (Supporting ultra-large external microSD/SDHC/SDXC card storage up to 256G.)
- Two Compatible Modes (Bundle-Stream Mode combines all channels into one for easier compatibility. Multi-Channel Mode sends all the original channels for separate settings.)
- Smart Stream (Bandwidth, storage and bit rate are saved with Smart Stream On, e.g. H.265+ saves 70%~80% bandwidth that of H.264.)

AI Video Analytics

• 8 intelligent VCA modes powered by AI engine, provides advanced and accurate smart video analysis for network cameras.
• People Counting technology provides high accuracy and real-time data based on AI algorithm with statistic reports.

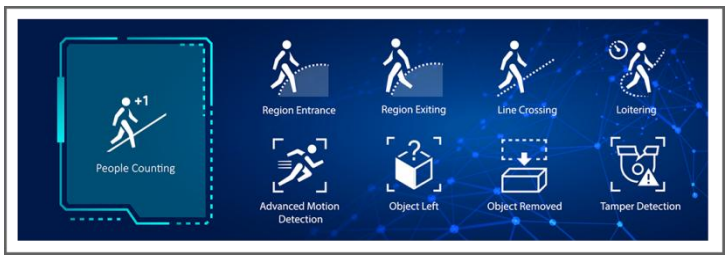

Fisheye Auto Tracking

The algorithm-based Fisheye Auto Tracking enables the Fisheye Camera to leverage digital PTZ to better safeguard the monitored area from overall to partition. When moving object is detected in the view, the Original view or Panoramic view will display the whole view, while other Regional views will cooperate with the linkage to track the details.

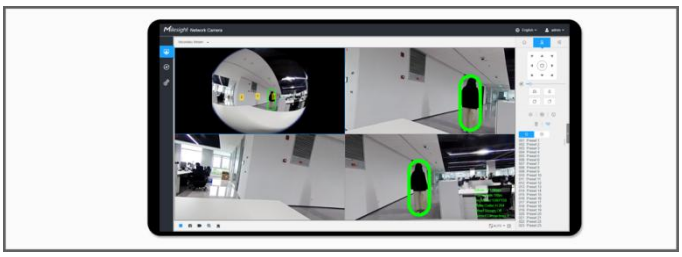

Advanced Heat Map

Applied in panoramic cameras, the Advanced Heat Map is used for the statistics of popularity in surveillance zones. Featuring various detailed configurations and intuitive Time/Space pattern, it visualizes visitor behavior which would greatly help the business intelligent management for smarter retail solutions.

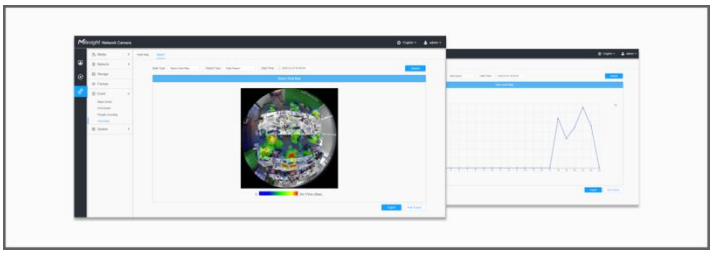

Exquisite Design

The body design of the camera insists on the idea of neatness and exquisiteness. As a whole, the screw-free design and Multiple-interface Cable keep the body neat. The Power Supply Board replaced the traditional way of power supply with cable which freeing interior space, making the camera an art of surveillance inside and out.

AI 360° Panoramic Fisheye Network Camera

	Model	MS-C8274-PA (4K)	MS-C9674-PA (12MP)
Camera	Image Sensor	1/1.8" Progressive Scan CMOS	1/1.7" Progressive Scan CMOS
	Min. Illumination	Color: 0.008Lux@F1.8 B/W: 0Lux with IR on	Color: 0.05Lux@F2.8 B/W: 0Lux with IR on
	WDR	120dB Super WDR	
	Lens	1.5mm@F1.8	1.98mm@F2.8
	Mount	M12	
	Field of View	Ceiling Mount: 360°; Wall Mount: 180°; Flat Mount: 360°	
	Shutter Time	1/100000s~1s	
	IR Distance	Up to 15m	
	Day/Night Mode	Day/Night/Auto/Customize/Schedule	
	S/N	>55dB	
Video	Max.Input Resolution	3840x2160	4000x3000
	Primary Stream	Fisheye View: 60Hz: 30fps@(2144x2144, 2048x2048, 1920x1920, 1280x1280) 50Hz: 25fps@(2144x2144, 2048x2048, 1920x1920, 1280x1280)	Fisheye View: 60Hz: 30fps@(3000x3000, 2560x2560, 1920x1920, 1280x1280) 50Hz: 25fps@(3000x3000, 2560x2560, 1920x1920, 1280x1280)
	Secondary Stream	Fisheye View: 60Hz: 30fps@(1280x960, 1024x1024, 736x736, 576x576) 50Hz: 25fps@(1280x960, 1024x1024, 736x736, 576x576)	
	Video Compression	H.265+/H.265(HEVC)/H.264+/H.264	
	Video Bit Rate	16Kbps~16Mbps(CBR/VBR Adjustable)	
	Privacy Masking	Up to 24 areas	
	ROI	Up to 8 areas	
	Image Setting	Brightness/Contrast/Saturation/Sharpness	
Display	Mount Mode	Ceiling Mount/Wall Mount/Flat Mount	
	Decoding Mode	On-board Dewarping/Client-side Dewarping	
	Display Mode	**11 display modes in total** **Client-side Dewarping:** Ceiling Mount: 1O, 1P, 2P, 4R, 1O3R, 1P1R, 1P4R, 1P6R, 1O8R Wall Mount: 1O, 1P, 4R, 1O3R, 1P1R, 1P4R Table Mount: 1O, 1P, 2P, 4R, 1O3R, 1P1R, 1P4R, 1P6R, 1O8R **On-board Dewarping:** Ceiling Mount: 1O, 1P, 2P, 4R, 1O3R, 1P3R, 1O1P3R Wall Mount: 1O, 1P, 4R, 1O3R, 1P3R, 1O1P3R Table Mount: 1O, 1P, 2P, 4R, 1O3R, 1P3R, 1O1P3R Note: 1. Only Fisheye in Multi-Channel Mode supports 1O1P3R. 2. The above letters O, P and R are explained as follows: O----Fisheye View; P----180° Panoramic View; 2P----2*180° Panoramic View; R----PTZ	
Interface	Ethernet	1*RJ45 10M/100M/1000M Ethernet Port	
	Audio I/O	Built-in Microphone; 1/1 (Multi-interface Version)	Built-in Microphone and Audio Input/Output interface
	Alarm I/O	1/1 (Multi-interface Version)	1/1
Network	Network Storage	NAS(Support NFS, SMB/CIFS), ANR	
	Protocol	IPv4/IPv6, ARP, TCP, UDP, RTCP, RTP, RTSP, RTMP, HTTP, HTTPS, DNS, DDNS, DHCP, FTP, NTP, SMTP, SNMP, UPnP, Bonjour, SIP, PPPoE, VLAN, 802.1x, QoS, IGMP, ICMP, SSL	

Audio	Audio Compression	G.711/AAC/G.722/G.726
	Audio Sampling Rate	8/16/32/44.1/48KHz
	Audio Bit Rate	16~256kbps
	Two-way Audio	Support
Intelligent Analytics	Video Analysis	Region Entrance, Region Exiting, Advanced Motion Detection, Tamper Detection, Line Crossing, Loitering, Object Left, Object Removed
	People Counting& Report	Count the number of people entering or exiting, up to 4 detection areas for regional people counting
System	Storage	Support microSD/SDHC/SDXC Card Local Storage, up to 256G
	Advanced Function	Auto Tracking, Heat Map, BLC, HLC, 2D DNR, 3D DNR, AWB, IP Address Filtering, AGC, Anti-flicker, Deblur, Watermark
	SIP/VoIP Support	Yes, Voice & Video-over-IP
	Event Trigger	Motion Detection, Network Disconnection, Audio Alarm, External Input, etc.
	Event Action	FTP Upload, SMTP Upload, SD Card Record, External Output, SIP Phone, HTTP Notification, etc.
	System Compatibility	ONVIF Profile G & Q & S & T, API
General	Working Temperature	-40℃~60℃
	Working Humidity	0~90%(Non-condensing)
	Power Supply	PoE (802.3af) / DC 12V±10%
	Power Consumption	6W MAX / 8W MAX (With IR on) ⋮ 6W MAX / 11W MAX (With IR on)
	Housing	Vandal-proof IK10-rated Metal Housing / Up to IP67-rated for Weather-resistant Performance
	Weight	700g
	Dimensions	Φ140mmX45.4mm
	Warranty	3 Years / 5 Years (Optional)

V8.03

Structure Diagrams

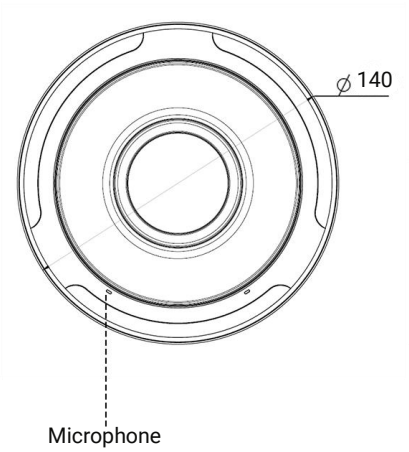

8MP Fisheye Camera

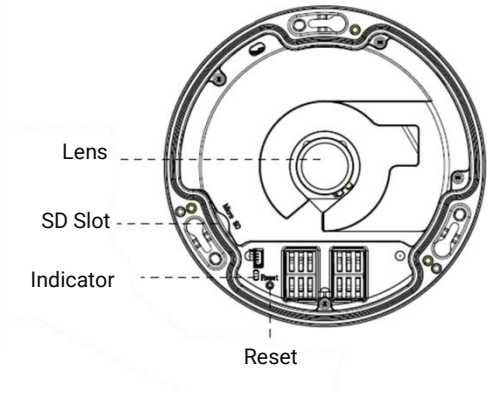

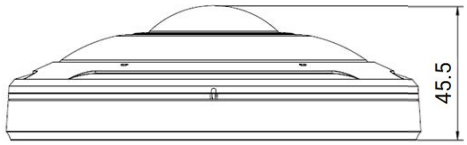

8MP Fisheye Camera (Multi-interface Version)

12MP Fisheye Camera

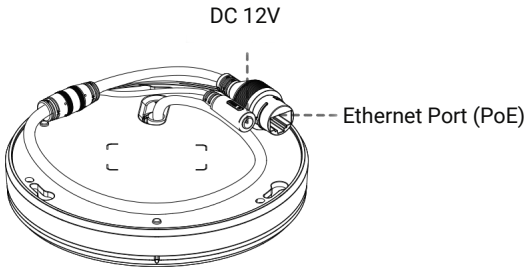

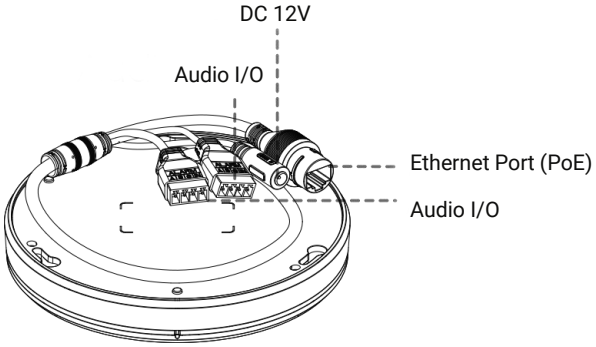

Units: mm

Accessories Support

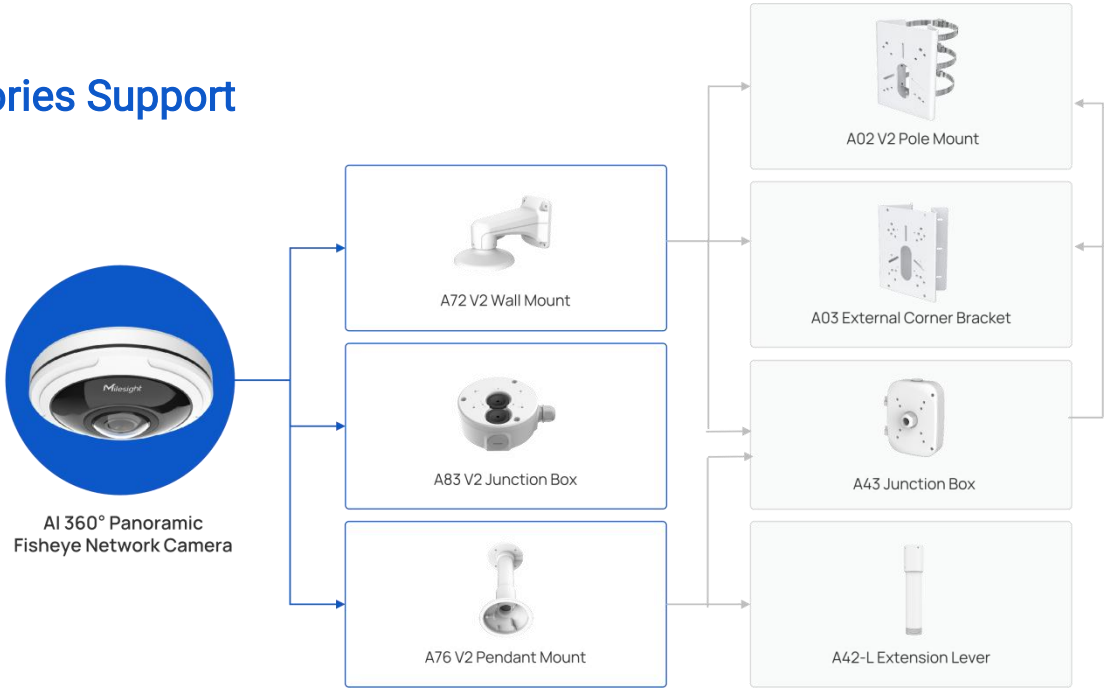

Milesight | www.milesight.com/security
Contact Us: sales@milesight.com support@milesight.com

Add: Building C09, Software Park Phase III, Xiamen 361024, Fujian, China
Tel:+86-592-5922772